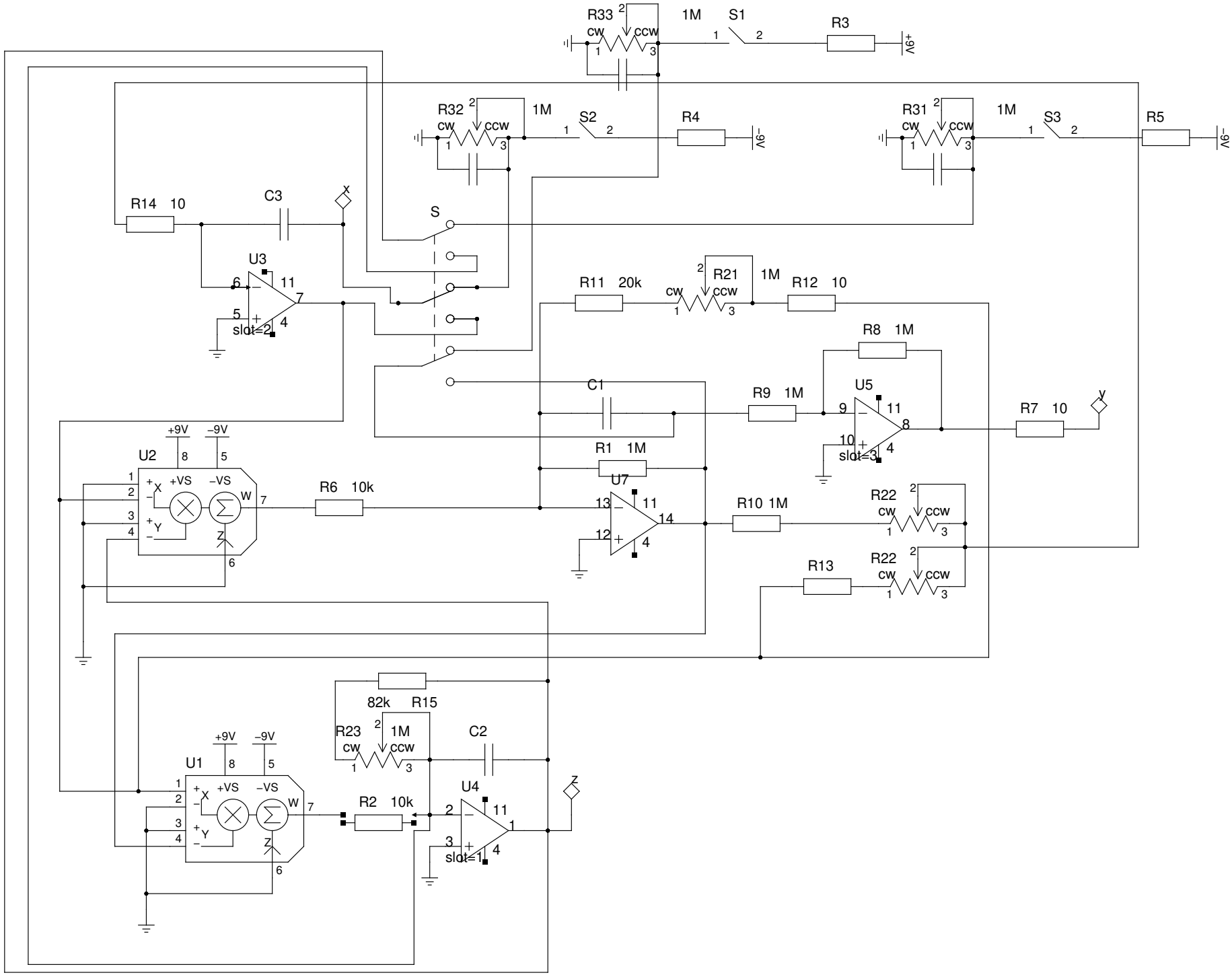
R33
cw
ccw
1M
S1
R3
+9V
R32
1M
S2
R4
−9V
R31
1M
S3
R5
−9V
R14 10
C3
x
S
U3
slot=2
R11 20k
R21
1M
R12 10
R8 1M
C1
R9 1M
U5
slot=3
R7 10
y
+9V
−9V
U2
+VS
−VS
R1 1M
R6 10k
U7
R10 1M
R22
R13
82k R15
R23
1M
C2
U1
U4
slot=1
R2 10k
z